MACHINE-TOOL PLANT **SASTA**

LATHE PRODUCTION EXPERT

METAL CUTTING MACHINES

MACHINE-TOOL PLANT SASTA

CONTENT

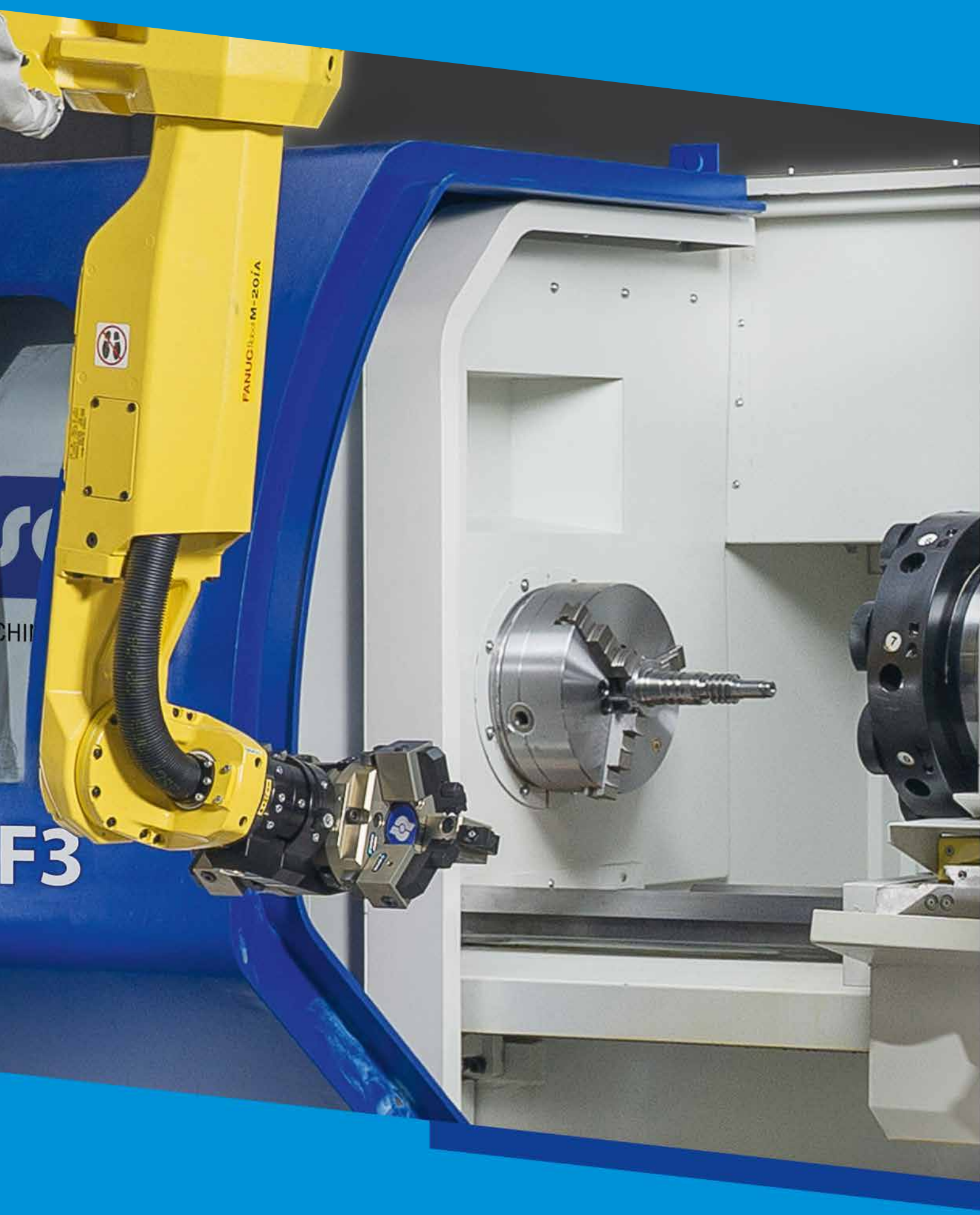
FANUC M-20iA
F3

MACHINE-TOOL PLANT **SASTA**

Sasta is one of the largest operating machine tool factories on the territory of Russia. The main activity of modern Sasta is a full cycle production of metal cutting machines: from designing and casting to final assembly.

We have our own design bureau, which has been developing and implementing new machine models for more than 40 years. The foundry with testing laboratory provides production of the main machine units and body parts. The blanking shop is equipped with the most advanced facilities. The factory machinery comprises more than 200 units, including unique equipment.

Today machine tool factory Sasta produces 6 main groups of metal cutting equipment: horizontal lathes, slant bed lathes, lathes with straight-through carriages, turning and milling machining centers, vertical lathes and pipe threading machines.

We are also gradually performing modernization and technical re-equipment of our own production site, because manufacturing of modern, accurate and reliable machines is possible only when each of its components is made strictly according to quality control requirements and advanced technology.

Sasta brand machines work in all regions of Russia from Kaliningrad on West to Sakhalin on East, in CIS countries and all over the world: in North and South America, Europe, Asia, Africa and Australia.

Today our metal cutting equipment successfully workes at Heavy Engineering, PowerGen, Aerospace, Defense, Shipbuilding and Transport industries.

COMPANY'S HISTORY

1971	Factory construction start.
1974	Factory first facility run.
1975	First machines release.
1976	Commissioning of the first automatic line. Production of the first machines with cycle and CNC system.
1979	Pipe-threading machines plant was put into operation. Start of the pipe threading machines production. Development of the first model designed for oil and gas industry.
1981	Production of 588 metal cutting machines and 4 automatic lines.

MACHINE-TOOL PLANT **SASTA**

2003	Production of the first turning machining center. Commissioning of the foundry equipped with the most advanced machinery.
2012	Start-up of the new automatic line designed for the processing of body parts by means of two horizontal boring machining centers with transport system for 50 pallets.
2013	Introduction of lathes with straight-through carriages, which allow machining of long shafts over the total length within one setting.
2017	Vertical lathes production start.
2018	Presentation of a new model of the multifunctional turning and milling center HT500. Technical reequipment and modernization of production facilities.
2019	The resumption of export sales.

SASTA TODAY

Machine tool factory Sasta is a Russian enterprise with half-century of existence, which preserved and inherited the best traditions of the Soviet machine building industry. Machines produced by Sasta have proved themselves as quality and reliable equipment known throughout the world. Equipment made by Sasta is supplied to machine building enterprises in Russia and is exported as well.

Sasta is one of few enterprises who managed to keep production culture, technical potential, engineering and working staff through the tough times.

The main activity of modern Sasta is a full cycle of metal cutting machines production: from designing and casting to final assembly.

MACHINE-TOOL PLANT **SASTA**

The Factory has 6 technological areas necessary for full cycle production.

The factory production facilities are more than 75,000 m^2.

The enterprise technical capabilities allow to produce machines of any complexity:

- horizontal lathes;
- flat bed lathes;
- turning and milling machining centers;
- lathes;
- slant bed machines;
- pipe-threading machines.

Accuracy and reliability of Sasta products are ensured by a closed production cycle: the most important machine components are produced and processed directly at the factory.

RESEARCH AND DEVELOPMENT DEPARTMENT

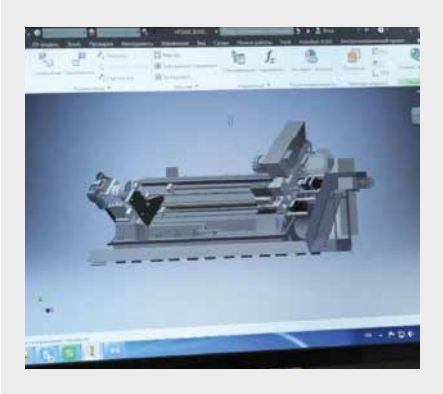

The research and development department has been operating on the basis of the machine tool factory Sasta for more than 40 years. Meanwhile a product line of reliable and high-quality metal cutting equipment was developed and successfully introduced within the walls of multiple domestic and foreign factories. Products of the factory are being used at enterprises belonging to defense industry, machine building complex, oil and gas industry and are being exported to 39 countries.

MACHINE-TOOL PLANT SASTA

All machines of Sasta model range are developed by own R&D department.

The R&D department performs a full cycle of design activities:

- development of technical specifications;
- development of mechanical components: beds, headstocks, carriage groups, etc.;
- development of hydraulic and pneumatic control systems;
- development of cover and safety protection;
- development of electrical equipment for machine tools.

The machines are elaborated involving modern design solutions and by means of advanced technologies well known in the world machinery engineering.

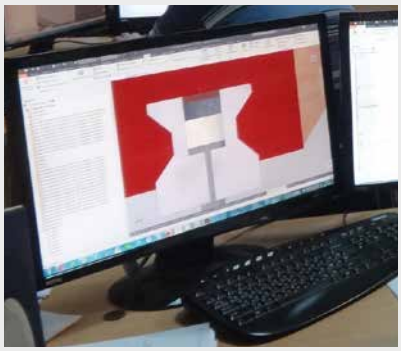

FOUNDRY

One of the most important advantages of Sasta is its own foundry, possessing technological flexibility, as well as the ability to manufacture cast iron in single or batch production.

The foundry was opened in 2003. The design capacity is 250 tons of cast iron per month.

The sites of the foundry are equipped with modern melting equipment:

- induction melting units INDUCTOTHERM;
- IMF forming equipment, using the third generation high-speed mixers and mechanical regeneration of the molding mixture;
- automated line of moldless molding.

The implemented technology based on cold-hardening mixtures allows obtaining molds of high dimensional accuracy, which makes it possible to produce any castings with minimal allowances for machining.

Finished casting has a high surface quality without metallized and chemical fumes.

MACHINE-TOOL PLANT **SASTA**

Industrial laboratory

The laboratory includes the following units:

- spectral laboratory;
- mechanical laboratory;
- metallographic laboratory;
- mixture laboratory;
- chemical laboratory.

The sites are fitted with special equipment which allows carrying out all necessary types of control: from the analysis of incoming materials to the control of melt chemical composition and microstructure of castings.

Qualified personnel performs control of castings at different production stages, including test works and metrological supervision.

MACHINING WORKSHOP

The machine tool factory Sasta performs machining of its own casting – complex body parts for the metal cutting equipment production.

The factory stock comprises more than 200 machines, including the following unique equipment:

• automatic line Toyoda, consisting of two Toyoda FA800S machining centers, with the possibility of continuous uninterrupted operation for 72 hours without operator's involvement. The line includes workpiece feeding system consisting of 50 interchangeable pallets and automatic tool changing system for 330 tools;

• 5-axes portal machining center Micromat, designed to handle large parts with a high precision. Precision accuracy is provided by the temperature control system at the main machine components;

MACHINE-TOOL PLANT **SASTA**

- cylindrical grinding machine Studer for spindle units final machining;
- horizontal milling centers with CNC;
- double-column machining centers;
- surface-grinding machining centers;
- planing machines;
- internal grinding equipment;
- gear milling machines and gear grinding machines;
- turning machining centers;
- milling machining centers;
- waterjet and laser machines;
- rolling-and-bending equipment including 4-roll hydraulic bending machine;
- own-produced equipment: turning and turning-milling centers Sasta.

Currently the plant is conducting technical production re-equipment: the production capacity is expanded due to the introduction of modern high-tech equipment, measuring and control devices, which, in its turn, ensures an uninterrupted production cycle and efficiency growth.

ASSEMBLING

Assembling areas:

- component assembly;
- electric wiring assembling;
- general machines assembling area;
- coating area;
- testing and after-sales training;
- packing.

Within the assembly cycle Sasta specialists perform function testing of each machine during 96 hours.

The factory facilities allow assembling of any equipment including heavy-duty and large-sized machines.

MACHINE-TOOL PLANT **SASTA**

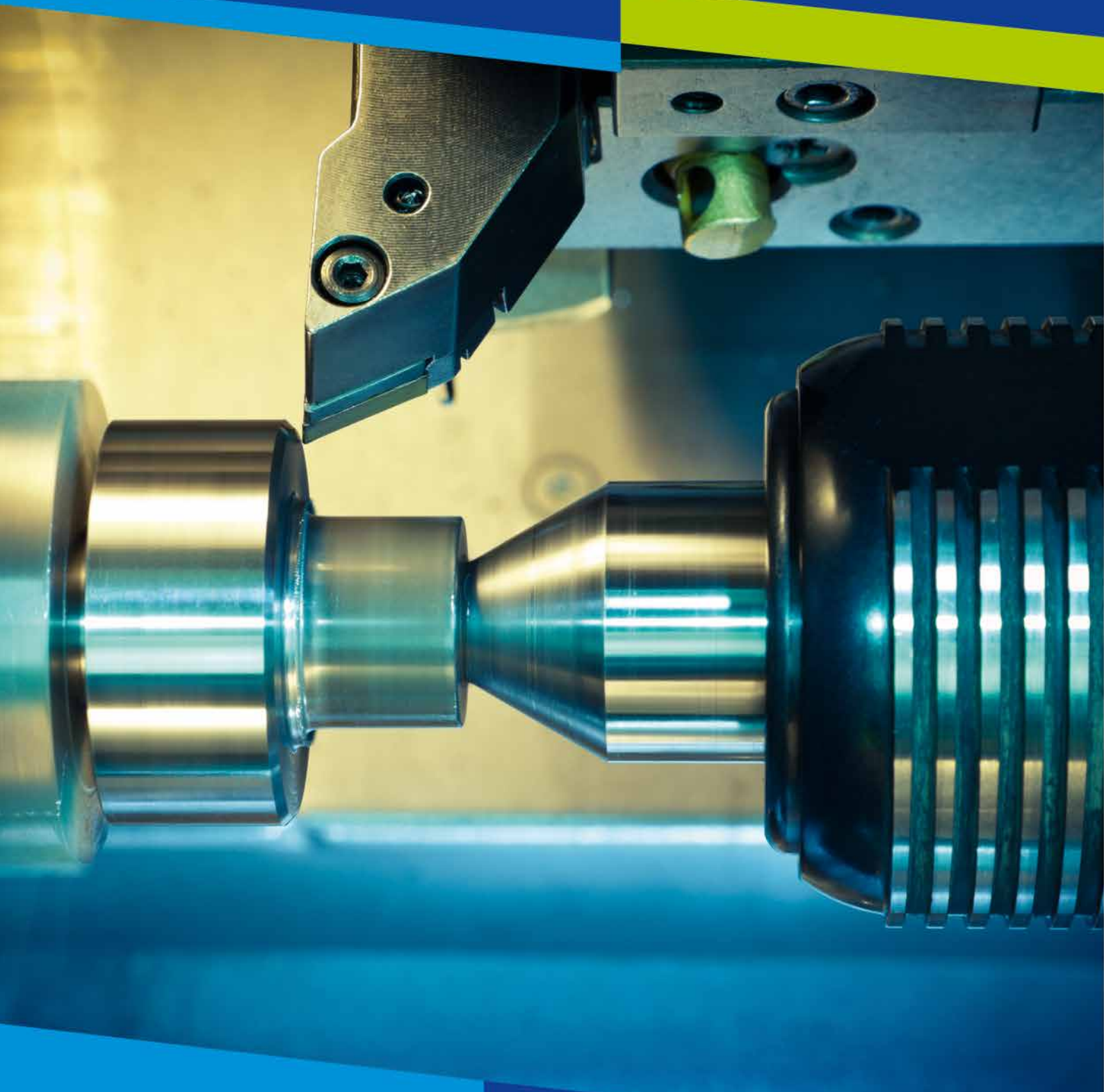

MACHINE-TOOL PLANT SASTA

MACHINES MODEL RANGE

- LATHES FOR MODERATE CUTTING DUTY
- LATHES FOR HEAVY CUTTING DUTY
- VERTICAL LATHE MACHINING CENTERS WITH CNC
- PIPE THREADING (OIL COUNTRY) LATHES
- HEAVY DUTY LATHES WITH STRAIGHT-THROUGH CARRIAGES

LATHES FOR MODERATE CUTTING DUTY

Manually operated lathes

CA500, CA600

Main advantages

• Rigid solid-cast bed artificially aged for stress relieving provides long-term stability of the machine accuracy.

• Wide v-guides hardened at depth 1,5-2 mm to 52 HRC and grinded ensure long life.

• Surfaces of moving units (carriage, tailstock) are scrapped.

• Solid metal spindle is assembled using high precision angular bearing (one duplex bearing in front and one – from the rear), it has reduced runout in axial and radial directions even while heavy duty cutting.

• Strict conformity to accuracy grade “High precision” with each machine test report attached.

Technical specification	CA500	CA600
CUTTING AREA		
Max. diameter of the workpiece to be processed over bed, mm	500	550
Max. diameter of the workpiece to be installed over GAP, mm	700*	770*
Max. diameter of the workpiece to be processed over carriage, mm	290	340
Max. length of the workpiece to be installed in centers, mm	1000/1500/2000/3000	
Max. weight of the installed workpiece (in chuck/in centers), kg	300/2000	
SPINDLE		
Spindle speed, rpm	16-2000	16-1600
Speed adjustment	Stepped	
Number of spindle speeds	22	21
Main motor power, kW	7.5 (11*)	11
Max. torque, Nm	1000	
Chuck diameter, mm	250 (315, 400*)	315 (400, 500*)
Spindle nose	A6 according to DIN55027	A11 according to DIN55027
Diameter of spindle bore, mm	55	95
RAPID FEED		
X axis rapid feed, mm/min	1900	
Z axis rapid feed, mm/min	3800	
FEED		
Longitudinal feeds range, mm/rev	0.05-2.8	
Cross feeds range, mm/rev	0.025-1.4	
Metric threads range, mm	0.5-112	
Module threads range, module	0.5-112	
Inch threads range, threads per inch	56-0.5	
Pitch threads range, pitch	56-0.5	
TOOLHOLDER		
Number of tools	4	
Tool section, mm	25x25	
TAILSTOCK		
Quill travel, mm	180	
Quill diameter, mm	80	
Quill taper	MT5	
DIMENSIONS AND WEIGHT		
Length, mm	2800/3380/3880/4880	
Width, mm	1265	1295
Height, mm	1485	1610
Weight, kg	3000/3500/4000/4500	3100/3600/4100/4600

* option

Standard equipment

- Headstock dead center
- 3-jaws self centering chuck
- Chuck guard with locking
- Micrometer stop of longitudinal travel
- Mechanized drive of the carriage tool slide
- 4-position toolholder
- Toolholder protective cover with watch window
- Work light
- Tailstock on inflatable bag with dead center and live centers
- Coolant system
- Chip tray
- Toolkit for machine installation

Options

- 3-jaws self-centering chucks, ,manual
- 4-jaws chucks with independent jaws movement, manual
- Bed with GAP
- Driver chuck
- Follow rest
- Steady rest
- Remote-mounted support rest (CA600)
- Threaded rest (CA500)
- Set of change gear wheels
- Taper attachment
- Metric thread indicator
- DRO “Newall” for 2 coordinates

LATHES FOR MODERATE CUTTING DUTY

Lathes with cycle CNC control system

CA500F2, CA600F2, CA700F2, CA800F2

Main advantages

• Advanced cycle CNC control system, provides CNC functions efficiency, facilitates operator`s servicing, maintains manual contol by means of MPG and intermediate switch.

• Rigid contsruction: rigid solid-cast bed, wide v-guides, five precision radial-axial bearings in the spindle unit, feeds servo-drives and ball screws instead of mechanical kinematic relations, – all this ensures accuracy and reliability of the machine.

• Turret (up to 8 tools) with vertical and horizontal rotation axis and with automatic tool change (option) instead of manual tool holder dramatically expands technological capacity of the machine.

Technical specification	CA500F2	CA600F2	CA700F2	CA800F2
CUTTING AREA				
Max. diameter of the workpiece to be processed over bed, mm	500	560	700	800
Max. diameter of the workpiece to be processed over carriage, mm	290	360	430	540
Length of the workpiece processed in the centers, mm	800/1300/1800/2800		850/1430/1850/2850/3850	
Max. weight of the workpiece installed (in chuck/in centers), kg	300/2000		400/3500	
SPINDLE				
Spindle speed, rpm	20…3500	20…2800	4…1600	
Speed adjustment	Stepless at 2 ranges			
Main motor power, kW	17/22		18,5/23	
Max. torque, Nm	797/997	884/1106	2250/2800	
Chuck diameter, mm	250 (315, 400*)	315 (400, 500*)	400 (500*)	400 (500, 630*)
Spindle nose according to DIN55026	A6		A11	
Spindle bore, mm	55	102	140 (145*)	
RAPID FEED				
X rapid feed, mm/min	4000			
Z rapid feed, mm/min	6000			
FEED				
X cutting feed range, mm/min	1-2000			
Z cutting feed range, mm/min	1-4000			
Cut thread stroke limit, rpm	0.5-150			
Feed speed adjustment	Stepless			
TOOLHOLDER				
Number of tools	4 (8*)			
Tool section, mm	25x25	25x25 (32x32*)	32x32 (25x25*)	
Tool change	Manual (automatic*)			
TAILSTOCK				
Quill travel, mm	200		240	
Quill diameter, mm	100		120	
Quill taper	MT5		MT6	
DIMENSIONS AND WEIGHT				
Length, mm	3290/3870/4370/5370		3250/4250/5300/6250	
Width, mm	1845		2300	
Height, mm	1915	1915	1960	
Weight, kg	2200/2700/ 3200/3900	2300/2800/ 3300/4000	4500/5000/ 5700/6300	4800/5300/ 6000/6600

* option

Standard equipment

- Cycle CNC control system
- Control panel with touchscreen
- 3-jaws manual self centering chuck
- Chuck guard with locking
- 4-position toolholder of exact positioning (with hirth coupling), 25x25 mm
- Toolholder protective cover with watch window
- Work light
- Tailstock on inflatable bag with dead center and live centers
- Coolant system
- Chip tray
- Toolkit for machine installation

Options

- Toolholder of exact positioning, 4-position, 32x32 mm
- Turret with vertical rotation axis, 4-position
- Turret with horizontal rotation axis, 8-position
- 3-jaws manual self centering chucks
- 4-jaws manual chucks with indepenent jaws
- Follow rest
- Steady rest
- Spindle plug
- Automatic lubrication
- Semi-cover and full cover machine protection
- Chip conveyor witn built-in tank and coolant pump (instead of coolant tank)
- Hydraulic drive of tailstock quill (instead of manual)
- Tipping chip tray (600 l)
- Coolant gun (or pneumatic gun)
- Electrtic cabinet
- Mini MPG portable
- Mechanized chucks with hydro (pneumo) drive

LATHES FOR MODERATE CUTTING DUTY

Lathes with cycle CNC control system

мод. CA750F2K, CA1000F2K

Main advantages

• Advanced cycle CNC control system, provides CNC functions efficiency, facilitates operator`s servicing, maintains manual control by means of MPG and intermediate switch.

• Optimal design solution: rigid solid-cast bed, antibacklash linear slide roller bearing units, five precision angular contact bearings in the spindle unit, feed servo drives and ball screw instead of mechanical kinematic relations – all this ensures accuracy and reliability of the machine.

• Turret (up to 8 tools) with vertical and horizontal rotation axis and with automatic tool change (option) instead of manual tool holder dramatically expands technological capacity of the machine.

Technical specification	CA750F2K	CA1000F2K
CUTTING AREA		
Max. diameter of the workpiece to be processed over bed, mm	850	990
Max. diameter of the workpiece to be processed over carriage, mm	450	600
Length of the workpiece installed in the centers, mm	1155/2155/3155/4155/5155	
Length of the workpiece processed in the centers, mm	930/1930/2930/3930/4930	
Max. weight of the workpiece installed (in chuck/in centers), kg	400/3000	
SPINDLE		
Speed range, rpm	5-2800 (5-2200*)	
Speed adjustment	Stepless at 2 ranges	
Main motor power/30 min, kW	32.6/40	
Max. torque/30 min, Nm	1500/1875 (1180/1475*)	
Chuck dia, mm	400 (500, 630)	
Spindle nose	A11 according to DIN55026	
Spindle bore, mm	102 (166*)	
FEED		
Cutting feed range, mm/min	1-4000	
Cut thread range, rpm	0.2-150	
X/Z rapid feed, mm/min	6000	
TOOLHOLDER		
Number of tools	4 (12*)	
Tool section, mm	32x32 (40x32, 32x32, 32x25*)	
Tool change	Manual (automatic*)	
TAILSTOCK		
Quill travel, mm	240	
Quill dia, mm	120	
Quill taper	MT6	
DIMENSIONS AND WEIGHT		
Length, mm	4565/5565/6565/7565/8565	
Machine width/with panel swivel, mm	2075/2555	
Height, mm	2120	
Weight, kg	5670/6670/7670/8670/9670	5820/6820/7820/8820/9820

* option

Standard equipment

- Cycle CNC control system
- Control panel with touchscreen
- MPG portable
- 3-jaws manual self centering chuck Ø400 mm
- 4-position toolholder of exact positioning (with hirth coupling 32x32)
- Tailstock with dead center and live centers
- Semi-cover machine protection
- Work light
- Coolant system
- Chip tray
- Toolkit for machine installation

Options

- 4-position toolholder “Hirth” (40x32)
- 4-position turret with vertical rotation axis
- 8-position turret with horizontal rotation axis
- 3-jaws manual self centering chucks
- 4-jaws manual chucks with jaws independent travel
- Hydro- and pneumatic 3-jaws chucks
- Hydraulic drive of tailstock quill (instead of manual)
- Hydraulic station (for quill hydraulic drive, rhydraulic chucks)
- Follow and steady rests
- Portable rest
- Chip conveyor with built-in tank and coolant pump (instead of coolant tank)
- Tipping chip tray (600 l)
- Coolant gun (or pneumatic gun)
- Electric cabinet conditioner
- Full cover (instead of semi-cover)

LATHES FOR MODERATE CUTTING DUTY

CNC lathes

CA500F3, CA600F3, CA700F3, CA800F3

Main advantages

• Rigid solid-cast bed artificially aged for stress relieving provides long-term stability of the machine accuracy.

• Wide v-guides hardened at depth 1.5-2 mm to 52 HRC and grinded ensure long life.

• Surfaces of moving units (carriage, tailstock) are scrapped and covered by special antifriction coating to provide movement with min. runout and friction-free.

• 3 axis 2 ranges headstock with stepless adjustment provides high torque (up to 2200 Nm) with increased accuracy.

• Linear scales at all the axes (option).

Technical specification	CA500F3	CA600F3	CA700F3	CA800F3
CUTTING AREA				
Max. dia of the workpiece to be installed over bed, mm	500	560	700	800
Max. dia of the workpiece to be processed , mm over bed over carriage	350 (500*) 250	350 (560*) 320	600 (700*) 430	600 (800*) 540
Max. length of the workpiece to be installed in the centers, mm	925/1500/2000/3000		900/1900/2900	
Length of the workpiece to be processed in the centers, mm	820/1300/1800/2800		850/1850/2850	
Max. weight of the workpiece installed (in chuck/in centers), kg	300/2000		400/3500	
SPINDLE				
Speed, rpm	20…3500	20…2800	4…1600	
Speed adjustment	Stepless at two ranges			
Main motor power, kW	15/18.5		22/27.5	
Max. torque, Nm	797/997	884/1106	1750/2200	
Chuck dia, mm	250 (315, 400*)	315 (400, 500*)	400 (500*)	400 (500, 630*)
Spindle nose according to DIN55026	A6		A11	
Spindle bore, mm	55	102	140 (145*)	
RAPID FEED				
X axis rapid feed, mm/min	5000			
Z axis rapid feed, mm/min	10000 (6000 for distance between centers 3000 mm)			
FEED				
X axis cutting feed range, mm/min	1-2000			
Z axis cutting feed range, mm/min	1-4000			
Cut thread range, mm/rev.	0.5-150			
Feed speed adjustment	Stepless			
TOOLHOLDER				
Number of tools	8 (4*)			
Tool section, mm	25x25	25x25 (32x32*)	25x25 (32x32*)	
Tool change	Automatic			
TAILSTOCK				
Quill travel, mm	200		240	
Quill diameter, mm	100		120	
Quill taper	MT 5		MT 6	
DIMENSIONS AND WEIGHT				
Length, mm	3290/3870/4370/5370		3250/4250/5300/6250	
Width, mm	1845		2300	
Height, mm	1915	1915	1960	
Weight, kg	2200/2700/ 3200/3900	2300/2800/ 3300/4000	4500/5000/ 5700/6300	4800/5300/ 6000/6600

* option

Standard equipment

- CNC Fanuc 0i-TF
- 3-jaws manual self centering chuck
- 8-position turret with horizontal rotation axis, type VDI40
- Tailstock with dead center and live centers
- Semi-cover machine protection
- Coolant system
- Chip tray
- Toolkit for machine installation

Options

- CNC Siemens 828D
- 4-position turret with vertical rotation axis
- 3-jaws manual self centering chucks
- 4-jaws manual chucks with jaws independent travel
- Hydro- and pneumatic 3-jaws chucks
- Hydraulic drive of tailstock quill (instead of manual)
- Hydraulic station (for quill hydraulic drive, rhydraulic chucks)
- Follow and steady rests
- Portable rest
- Chip conveyor with built-in tank and coolant pump (instead of coolant tank)
- Tipping chip tray (600l)
- Coolant gun (or pneumatic gun)
- Electric cabinet conditioner
- Full cover (instead of semi-cover)

LATHES FOR MODERATE CUTTING DUTY

Turning machining centers

HT500F3/F4

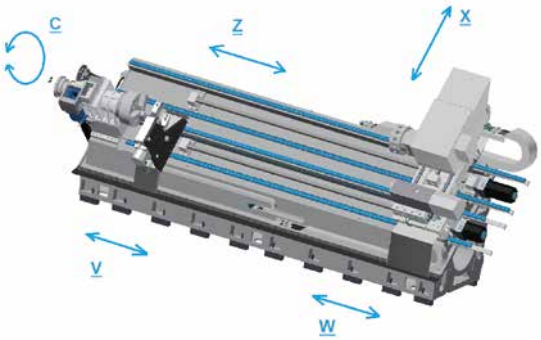

Main advantages

• 45° slant solid cast bed of grey cast with high damping features.

• Antibacklash linear slide roller bearing units and increased (50 mm) diameter of ball screw with accuracy grade C3 provide high static and dynamic rigidity during longterm operation.

• Increased spindle unit with five precision angular bearings provide machine accuracy and reliability.

• Powerful subspindle (option) dramatically expands machine capacity.

• Spindle speed adjustment range (from 0 to 5000 rpm) makes it possible to perform machining of workpieces made of ferrous and nonferrous materials and alloy steel.

• 12-position turret VDI50 with driven tool and Y axis (option) makes it possible to process complicated workpieces.

• Programmable tailstock with quill hydraulic drive.

• Machining length up to 3000 mm, weight of the workpiece machined in the centers – 2200 kg.

Technical specification	HT500F3/F4
CUTTING AREA	
Max. dia of the workpiece to be installed over bed, mm	700
Max. dia of the workpiece to be processed over bed, mm	600
Max. dia of the workpiece to be processed over carriage, mm	600
Length of the workpiece to be processed, mm	1000/2000/3000
Max. weight of the workpiece installed in the chuck, kg	800
Max. weight of the workpiece installed in the centers, kg	1800
Max. weight of the workpiece installed in the centers and rest, kg	2200
SPINDLE	
Max. spindle speed, rpm	3000 (2200, 5000)*
Main motor power, kW	22/26
Max. torque, Nm	633/800
Spindle speed adjustment	Stepless at 2 ranges
Spindle taper according to DIN55026	A11 (A6)*
Chuck diameter, mm	315 (250, 400)*
Spindle bore, mm	102 (55, 166)*
Bar bore diameter, mm	90 (42)*
SUBSPINDLE PARAMETERS (OPTION)	
Subspindle bore, mm	55
Bar bore dia, mm	42
Max. speed, rpm	5000
Spindle taper according to DIN55026	B-6/A-6
Motor power/30 min, kW	22/26
Max. torque (S1)/30 min	633/800
TRAVEL	
X axis travel, mm	305
Z axis travel, mm	1000/2000/3000
W axis travel (tailstock), mm	800/1800/2800
V axis travel (rest), mm	600/1600/2600
Y axis travel (option), mm	±55
FEED	
X/Z cutting feed, mm/min	1-10000
X/Z rapid feed, mm/min	24000
TURRET	
Number of tools (including driven)	12 (12)
Tool type	VDI 50
Drive power, kW	5.5
Max. torque, Nm	35
Tool speed, rpm	4000
TAILSTOCK	
Type of tailstock movement	Programmable
Tailstock construction type	With quill hydraulic drive
Quill taper	MT6
DIMENSIONS AND WEIGHT	
Machine width/with panel swivel, mm	2625/3030
Height, mm	2300
Length, mm	3925/4925/5925
Weight, kg	8000/10000/12000

* option

Standard equipment

- CNC Fanuc 0i-TF
- MPG portable
- Headstock with spindle bore Ø102 mm
- 3-jaws self centering hydraulic chuck
- 12-position turret with driven tool, VDI50
- Tailstock with quill hydraulic drive with built-in spindle including center
- Hydraulic station
- Automatic lubrication system
- Foot pedal for chuck and tailstock control
- Coolant system with tank
- Full cover protection
- Work light
- Spare parts
- Toolkit for installation

Options

- CNC Siemens 828D
- Machine with Y axis
- Spindle C axis
- Subspindle, 15/18 kW, 4500 rpm
- Spindle bore up to Ø55 mm, up to Ø166 mm
- 3-jaws self centering hydraulic chuck
- Self centering rests with hydraulic drive
- Manual portable/automatic sensor for tool control
- Chip conveyor with built-in tank and coolant pump (instead of coolant tank)
- Tipping chip tray (600 l)
- Coolant gun (or pneumatic gun)
- Electric cabinet conditioner
- Bar feeder

LATHES FOR MODERATE CUTTING DUTY

Turning machining centers

HT700F3/F4

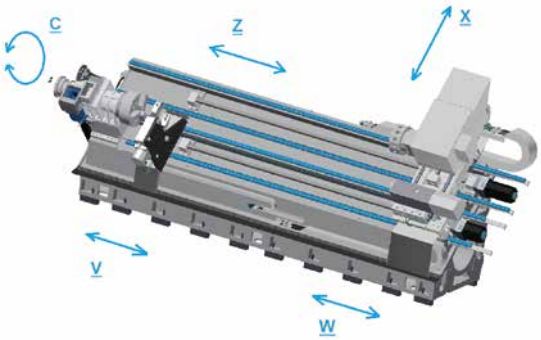

Main advantages

• Solid cast iron cast iron bed with high damping characteristics.

• Wide (710 mm) prismatic sliding guides and an increased (50 mm) diameter of ball screws with accuracy class C3 guarantee static and dynamic rigidity over a long service life.

• Reinforced spindle unit with five precision angular contact bearings ensures accuracy and reliability of the machine.

• Spindle speed adjustment (from 0 to 5000 rpm) allows to perfor, machining from both ferrous and non-ferrous metals and from alloyed steels.

• The machine could be equipped with subspindleinstead of tailstock.

• The 12-position turret VDI60/BMT85 with the living tool and the Y axis (option) allows the processing of parts of a complex profile.

• Programmable tailstock with hydraulic quill.

• High (2160 Nm) torque ensures stability under heavy cutting conditions.

• The surfaces of movable units (carriage, tailstock) are scraped and covered with a special anti-friction coating to move with minimal wear and no friction.

• Machining length up to 3800 mm, the weight of the workpiece in the centers – 3000 kg.

Technical specification	HT700F3/F4
CUTTING AREA	
Max. diameter of the workpiece to be installed over bed, mm	900
Max. diameter of the workpiece to be processed over bed, mm	700
Max. diameter of the workpiece to be processed over carriage, mm	700
Workpice length, mm	1300/1800/2800/3800
Max. weight of the workpiece to be installed in chuck, kg	1000
Max. weight of the workpiece to be installed in centers, kg	2000
Max. weight of the workpiece to be installed in centers and in rest, kg	3000
SPINDLE	
Max. spindle speed, rpm	3000 (5000)*
Main motor power, kW	30/37
Max. torque, Nm	1747/2160
Speed adjustment	Stepless at 2 ranges
Spindle nose according to DIN55026	A2-11
Chuck diameter, mm	450 (500, 600)*
Diameter of spindle bore, mm	155
Bar bore diameter, mm	117
TRAVEL	
X axis travel, mm	385
Z axis travel, mm	1500/2000/3000/4000
W axis travel (tailstock), mm	1300/1800/2000/3800
Y axis travel (option), mm	±55
FEED	
X/Z cutting feed, mm/min	1-10000
X/Z rapid feed, mm/min	20000
TURRET	
Number of tools (incl. driven tool)	12 (12)
Toolholder type	VDI60/BMT85
Drive power, kW	3.7
Max. torque, Nm	35
Tool speed, rpm	4000
TAILSTOCK	
Type of the tailstock body movement along the guide ways	Programmable
Tailstock construction	With hydraulic quill
Quill taper	MT5
DIMENSIONS AND WEIGHT	
Width, mm	2500
Height, mm	2400
Length, mm	5600/6500/7200/8200
Weight, kg	12000/14000/16000/17000

* option

Standard equipment

- Fanuc 0i-TF
- MPG portable
- Hydraulic 3-jaws self centering chuck
- 12-position turret with driven tool, VDI60
- Tailstock with hydraulic quill, with a rotating spindle built into the quill, with center
- Hydraulic station
- Auto lubrication system for guideways
- Foot pedal to control the chuck and tailstock
- Coolant system with coolant tank
- Full cover protection
- Work light
- Spare parts kit
- Leveling pads

Options

- Siemens 828D CNC system
- 12-position turret with driven tool, type BMT85
- Machine with Y axis
- Spindle “C” axis
- Hydraulic 3-jaws self centering chuck
- Self centering rests with hydraulic driver
- Manual removable / automatic tool control gauge
- Chip conveyor with in-built tank and coolant pump (instead of coolant tank)
- Tipping chip tray (600 l)
- Coolant gun (or pneumatic gun)
- Air conditioner
- Bar feeder

LATHES FOR MODERATE CUTTING DUTY

Turning machining centers

CA750F3/F4K, CA1000F3/F4K

Main advantages

• Solid cast iron cast iron bed with high damping characteristics.

• The backlash-free roller guides and the increased (50 mm) diameter of the ball screws with accuracy class C3 guarantee static and dynamic rigidity for a long service life.

• The spindle unit with five precision angular contact bearings ensures the accuracy and reliability of the machine.

• 12-position turret VDI50 with driven tool (optional).

• Optical scales along all axes (optional).

• High (up to 2262 Nm) torque ensures stability in heavy cutting conditions.

• Workpiece weight in centers up to 3000 kg.

Technical specification	CA750F3/F4K	CA1000F3/F4K
CUTTING AREA		
Max. diameter of the workpiece to be processed over bed, mm	850	990
Max. diameter of the workpiece to be processed over carriage, mm	450	600
Max. length of the workpiece to be installed in centers, mm	1155/2155/3155/4155/5155	
Max. length of the workpiece to be processed in centers, mm	930/1930/2930/3930/4930	
Max. weight of the installed workpiece (in chuck/in centers), kg	400/3000	
SPINDLE		
Speed range, rpm	5-2800 (5-2200*)	
Speed adjustment	Stepless at 2 ranges	
Main motor power/30 min, kW	Fanuc: 30/37.5 Siemens: 28/35	
Max. torque/30 min, Nm	Fanuc: 1810/2262 (1424/1780*) Siemens: 1940/2425 (1528/1910*)	
Chuck diameter, mm	400 (500, 630)	
Spindle nose	A11 according to DIN55026	
Diameter of spindle bore, mm	102 (166*)	
FEED		
Cutting feed range, mm/min	1-4000	
Cut thread stroke limit, mm/rev	0.2-150	
X and Z rapid feed, mm/min	10000	
TURRET		
Number of tools	12 (4*)	
Tool section, mm	32x25 (32x32, 40x40*)	
Number of driven tools	12*	
Driven tool power, kW	7.5*	
Driven tool speed, rpm	5000*	
TAILSTOCK		
Quill travel, mm	240	
Quill diameter, mm	120	
Quill taper	MT6	
DIMENSIONS AND WEIGHT		
Length, mm	4565/5565/6565/7565/8565	
Width (with/without control panel), mm	2075/2555	
Height, mm	2120	
Weight, kg	5800/6800/7800/8800/9800	

* option

Standard equipment

- Fanuc 0i-TF CNC system
- MPG portable
- 3-jaws self centering manual chuck Ø400 mm
- 12-position turret VDI50
- Tailstock with live and dead centers
- Semi-cover protection
- Work light
- Coolant system
- Chip tray
- Leveling pads

Options

- Siemens 828D CNC system
- 12-position turret with driven tool, VDI50
- 8-position turret VDI50 or 4-position turret with vertical axis
- 3-jaws self centering manual chuck
- 4-jaws chucks with independent jaws movement, manual
- Pneumatic 3-jaws chucks
- Spindle “C” axis
- Follow and steady rests
- Remote rest
- Chip conveyor with in-built tank and coolant pump (instead of coolant tank)
- Tipping chip tray (600 l)
- Coolant gun (or pneumatic gun)
- Air conditioner
- Full cover (instead of semi-cover) protection

LATHES FOR HEAVY CUTTING DUTY

Lathes with cycle CNC control system

CA1100F2, CA1250F2, CA1400F2

Main advantages

• Cycle CNC control system is the latest operational control system, which provides the functionality of the CNC system with ease of maintenance by the operator and maintaining the possibility of manual control through the handwheel and cross switch.

• High (up to 7625 Nm) torque on the spindle ensures performance on the most heavy cutting conditions.

• The maximum weight of the workpiece to be processed in centers up to 8 tons, length up to 12 m.

• Solid cast iron bed and wide prismatic and flat sliding guides ensure static and dynamic rigidity for a long service life.

• Special stand for boring bars Ø100 mm.

Technical specification	CA1100F2	CA1250F2	CA1400F2
CUTTING AREA			
Max. diameter of the workpiece to be processed and to be installed, mm over bed over carriage	 1080 660	 1265 860	 1450 1060
Max. length of the workpiece to be processed in centers, mm	1050/2050/3050/...12050		
Max. weight of the installed workpiece (in chuck/in centers), kg	1000/8000		
SPINDLE			
Spindle speed, rpm	5…750		
Speed adjustment	Stepless at 2 ranges		
Main motor power, kW	31.94/39.27		
Max. torque, Nm	6100/7625		
Chuck diameter, mm	1000 (500, 630, 800*)		
Spindle nose according to DIN55026	A15		
Diameter of spindle bore, mm	180		
FEED			
X/Z cutting feed range, mm/min	1-4000		
X and Z rapid feed, mm/min	6000		
Feed adjustment	Stepless		
TOOLHOLDER			
Number of tools	4 (12*)		
Tool section, mm	50x40 (40x40, 32x25*)		
TAILSTOCK			
Quill travel, mm	275 (320*)		
Quill diameter, mm	180 (280*)		
Quill taper	MT6		
DIMENSIONS AND WEIGHT			
Length, mm	5175/6175/7175		
Width/with control panel swivel, mm	2650/3130		2650/3100
Height, mm	2425		2600
Weight, kg	9850/10850/11850**	10350/11350/12350**	10850/11850/12850**

* option
** for machines with distance between centers 1000, 2000, 3000 mm

Standard equipment

- Cycle CNC control system
- MPG portable
- 4-jaws chuck with independent jaws movement, Ø1000 mm
- 4-position toolholder with “Hirth” coupling
- Tailstock with hydraulic quill, with a rotating spindle built into the quill, with center MT6
- Semi-cover protection
- Work light
- Coolant system
- Chip tray
- Leveling pads

Options

- 4-position turret with vertical axis
- 8-position turret with horizontal axis
- 3-jaws self centering manual chuck
- 4-jaws chucks with independent jaws movement, manual
- Pneumatic 3-jaws chuck
- Hydraulic quill of tailstock (instead of manual)
- Hydraulic station (for quill hydraulic driver, hydraulic chucks)
- Follow and steady rests
- Remote rest
- Chip conveyor with in-built tank and coolant pump (instead of coolant tank)
- Tipping chip tray (600 l)
- Coolant gun (or pneumatic gun)
- Air conditioner
- Full cover protection (instead of semi-cover)

Turning machining centers

CA1100F3/F4, CA1250F3/F4, CA1400F3/F4

Main advantages

- High (up to 6675 Nm) torque on the spindle allows machining on the most heavy cutting conditions.
- The maximum weight of the workpiece to be processed in centers up to 8 tons, length up to 12 m.
- Solid cast iron bed and wide prismatic and flat sliding guide ways ensure static and dynamic rigidity for a long service life.
- 12-position turret VDI50 with driven tool (optional) expands the technological capabilities of the machine.
- Special stand for boring bars 100 mm.

Technical specification	CA1100F3/F4	CA1250F3/F4	CA1400F3/F4
CUTTING AREA			
Max. diameter of the workpiece to be processed and to be installed, mm over bed over carriage	 1080 660	 1265 860	 1450 1060
Max. length of the workpiece to be processed in centers, mm	1050/2050/3050/5050/7050/8050/10050/12050		
Max. weight of the installed workpiece (in chuck/in centers), kg	1000/8000		
SPINDLE			
Spindle speed, rpm	5…750		
Speed adjustment	Stepless at 2 ranges		
Main motor power, kW	30/38 (28/35*)		
Max. torque, Nm	4982/6227 (5340/6675*)		
Chuck diameter, mm	1000 (500, 630, 800*)		
Spindle nose according to DIN55026	A15		
Diameter of spindle bore, mm	180		
FEED			
X/Z cutting feed range, mm/min	1-4000		
X and Z rapid feed, mm/min	10000 (6000 for distance between centers 5000 mm)		
Feed adjustment	Stepless		
TURRET			
Number of tools	4 (12*)		
Tool section, mm	40x40 (32x32*)		
Number of driven tools	12*		
Driven tool power, kW	7.5 (8,2)*		
Driven tool speed, rpm	5000		
TAILSTOCK			
Quill travel, mm	275 (320*)		
Quill diameter, mm	180 (280*)		
Quill taper	MT6		
DIMENSIONS AND WEIGHT			
Length, mm	5175/6175/7175**		
Width/with control panel swivel, mm	2650/3130		2650/3100
Height, mm	2425		2600
Weight, kg	1000/11000/12000**	10600/11600/12600**	11000/120000/13000**

* option
** for machines with distance between centers 1000, 2000, 3000 mm

Standard equipment

- Fanuc 0i-TF CNC system
- MPG portable
- 4-jaws chuck with independent jaws movement, Ø1000 mm
- 4-position turret with vertical axis
- Tailstock with hydraulic quill, with a rotating spindle built into the quill, with center MT6
- Semi-cover protection
- Work light
- Coolant system

Options

- Siemens 828D CNC system
- 4-position turret with vertical axis
- 12-position turet with horizontal axis
- 12-position turet with horizontal axis and driven tool
- 3-jaws self centering manual chuck
- 4-jaws chucks with independent jaws movement, manual
- Hydraulic and pneumatic chucks
- Spindle “C” axis
- Spindle plug
- Center resistant for spindle
- Hydraulic quill of tailstock
- Hydraulic station (for quill hydraulic driver, hydraulic chucks)
- Follow and steady rests
- Special stand for boring bars
- Chip conveyor with in-built tank and coolant pump (instead of coolant tank)
- Tipping chip tray (600 l)
- Coolant gun (or pneumatic gun)
- Air conditioner
- Full cover protection (instead of semi-cover protection)

VERTICAL LATHE MACHINING CENTERS WITH CNC (F3) AND MILLING FUNCTION (F4)

BT1000F3/F4, BT1200F3/F4, BT1600F3/F4

Main advantages

• Solid cast slant-bed of high quality cast iron ensures high rigidity and vibration resistance.

• The balancing system of the machine is built on a nitrogen battery, providing the best anti-vibration characteristics compared to counterbalanced balancing systems.

• High spindle drive power.

• The milling function significantly expand the technological capabilities of the machine.

Technical specification	BT1000F3/F4	BT1200F3/F4	BT1600F3/F4
CUTTING AREA			
Facing plate diameter, mm	1000	1250	1600
Max. diameter of the workpiece to be installed, mm	1200	1600	2000
Max. diameter of the workpiece to be processed, mm	1100	1350	1800
Max. height of the workpiece to be processed , mm	950 (1250)*	1250 (1650)*	
Max. workpiece weight, kg	4000	5000	8000
FACING PLATE			
Cuuting feed range, mm/rev	0.01-50		
X axis rapid feed, m/min	12		
Z axis rapid feed, m/min	10		
ATC			
Number of tools	12		
Tool type	BT50		
Max. tool weight, kg	50		
MILLING SPINDLE (+ "C" axis) for F4 series			
Spindle speed, rpm	2400		
Milling spindle torque, Nm	550		
Milling spindle motor power, kW	7.5/11 (15/18.5)		
RAM			
Ram section, mm	230x230		
DIMENSIONS AND WEIGHT			
Length, mm	4120	4700	5050
Width (with chip conveyor), mm	5600	5800	6300
Height, mm	5320	5500	
Weight, kg	24000	32000	35000

* option

Standard equipment

- Fanuc 0i-TD CNC system (or Fanuc 0i-TF)
- ATC for 12 tools
- Chiller for gearbox and facing plate
- 4-jaws facing plate
- BT50 tool shank
- Cross beam lifting and lowering system with hydraulic clamping at 4 points
- Auto lubrication system for guideways
- Chip conveyor with chip tank
- Electronic handwheel
- Protective covers
- Transformer
- Leveling pads
- Tool kit

Options

- ATC for 16, 30, 60, 90 tools
- Extension ram travel
- Column height extension
- Air conditioner for electrical cabinet
- Coolant through spindle
- Tool measurement system
- Workpiece measurement system
- Cross beam navigation system
- Linear scales
- Spindle motor upgrade to 75/100 kW
- Facing plate with hydraulic clamp and 3 or 4 or 6 jaws
- V-slots tool connection in ram
- X and Z axes gearbox 1:3

VERTICAL LATHE MACHINING CENTERS WITH CNC (F3) AND MILLING FUNCTION (F4)

BT2000F3/F4, BT2500F3/F4, BT3000F3/F4

Main advantages

• Solid cast slant-bed of high quality cast iron ensures high rigidity and vibration resistance.

• The balancing system of the machine is built on a nitrogen battery, providing the best anti-vibration characteristics compared to counterbalanced balancing systems.

• High spindle drive power.

• The milling function significantly expand the technological capabilities of the machine.

Technical specification	BT2000F3/F4	BT2500F3/F4	BT3000F3/F4
CUTTING AREA			
Facing plate diameter, mm	2000	2500	3000
Max. diameter of the workpiece to be installed, mm	2500	3000	3500
Max. diameter of the workpiece to be proccesed, mm	2300	2800	3400
Max. height of the workpiece to be proccesed, mm	1600 (2000)*		1800 (2200)*
Max. workpiece weight, kg	15000		20000
FACING PLATE			
Spindle speed, rpm	2-200	2-160	2-120
Torque, Nm	46000	62700	68000
Main motor power, kW	60/75 (75/100)*		
TRAVEL			
Carriage horizontal travel, mm	2275	2525	2775
Vertical ram travel, mm	1100 (1500)*	1100 (1400)*	1000 (1400)*
Cross rail travel, mm	1150		
FEED			
Cutting feed, mm/rev	0.01-50		
X axis rapid feed, m/min	12	10	
Z axis rapid feed, m/min	10		
ATC			
Number of tools	12	12 (16, 30, 60, 90)	
Tool type	BT50		
Max. tool weight, kg	50		
MILLING SPINDLE (+ "C" axis) for F4 series			
Spindle speed, rpm	2400	2500	
Milling spindle torque, Nm	730		
Milling spindle motor power, kW	11/15 (18/22)		
RAM			
Ram section, mm	280x280		
DIMENSIONS AND WEIGHT			
Length, mm	5050	5400	6100
Width (with chip conveyor), mm	7600		8170
Height, mm	6700		
Weight, kg	43000	52000	56000

* option

Standard equipment

- Fanuc 0i-TD CNC system (or Fanuc 0i-TF)
- ATC for 12 tools
- Chiller for gearbox and facing plate
- 4-jaws facing plate
- BT50 tool shank
- Cross beam lifting and lowering system with hydraulic clamping at 4 points
- Auto lubrication system for guideways
- Chip conveyor with chip tank
- Electronic handwheel
- Protective covers
- Transformer
- Leveling pads
- Tool kit

Options

- ATC for 16, 30, 60, 90 tools
- Extension ram travel
- Column height extension
- Air conditioner for electric cabinet
- Coolant through spindle
- Tool measurement system
- Workpiece measurement system
- Cross beam navigation system
- Linear scales
- Spindle motor upgrade to 75/100 kW
- Facing plate with hydraulic clamp and 3 or 4 or 6 jaws
- V-slots tool connection in ram
- X and Z axes gearbox 1:3

VERTICAL LATHE MACHINING CENTERS WITH CNC (F3) AND MILLING FUNCTION (F4)

BT4000F3/F4, BT5000F3/F4, BT6000F3/F4

Main advantages

• Solid cast slant-bed of high quality cast iron ensures high rigidity and vibration resistance.

• The balancing system of the machine is built on a nitrogen battery, providing the best anti-vibration characteristics compared to counterbalanced balancing systems.

• High spindle drive power.

• The milling function significantly expand the technological capabilities of the machine.

Technical specification	BT4000F3/F4	BT5000F3/F4	BT6000F3/F4
WORKING AREA			
Facing plate diameter, mm	4000	5000	6000
Max. diameter of workpiece to be installed, mm	5000	6000	7000
Max. diameter of workpiece to be processed, mm	4600	6000	7000
Max. height of the processed workpice , mm	1800 (2200)*	2600	
Max. weight of the processed workpiece, kg	30000 (40000)*	80000	10000
FACING PLATE			
Spindle speed range, rpm	2-60	2-50	2-20
Max. torque, Nm	125000	140000	160000
Main motor power, kW	60/75 (75/100)*		
TRAVEL			
Horizontal travel of the carriage, mm	2775	-100+3000	-100+4000
Vertical travel of the ram, mm	1500	2200	
Cross beam travel, mm	1150 (1500)*	1800	
FEED			
Cutting feed range, mm/rev	0.01-50		
X axis rapid feed, m/min	10		
Z axis rapid feed, m/min	10		
ATC			
Number of tools	12 (30,60, 90)*		
Tool type	BT50		
Max. tool weight, kg	50		
Milling spindle (+"C" axis) for F4 series			
Spindle speed, rpm	2500		
Max. torque, Nm	960		
Milling spindle motor power, kW	15/18		
RAM			
Ram cross section, mm	280x280		
DIMENSIONS AND WEIGHT			
Length, mm	10000	12500	13000
Width (with chip conveyor), mm	8170	9000	
Height, mm	7000	9000	
Weight, kg	82000	140000	170000

* option

Standard equipment

- Fanuc 0i-TD CNC system (or Fanuc 0i-TF)
- ATC for 12 tools
- Cooling station of facing plate gearbox
- 4-jaws facing plate
- BT50 tool shank
- Cross bean lifting and owering system with hydraulic clamping at 4 points
- Auto lubrication system for guideways
- Chip conveyor with coolant tank
- Electronic handwheel
- Protective covers for work area
- Transformer
- Set of pads

Options

- ATC for 16, 30, 60, 90 tools
- Increasing the travel of the ram
- Increasing the height of the column
- Air conditioner
- Coolant throught spindle
- Tool measurement system
- Workpiece measurement system
- Cross beam navigation system
- Linear scales
- Enlarged main motor 75/100 kW
- Facing plate with hydraulic clamp and 3 or 4 or 6 jaws
- V-slots tool connection RAM
- X and Z axes gearbox 1:3

PIPE-THREADING (OIL COUNTRY) LATHES

Pipe-threading lathes with manual control

CA983

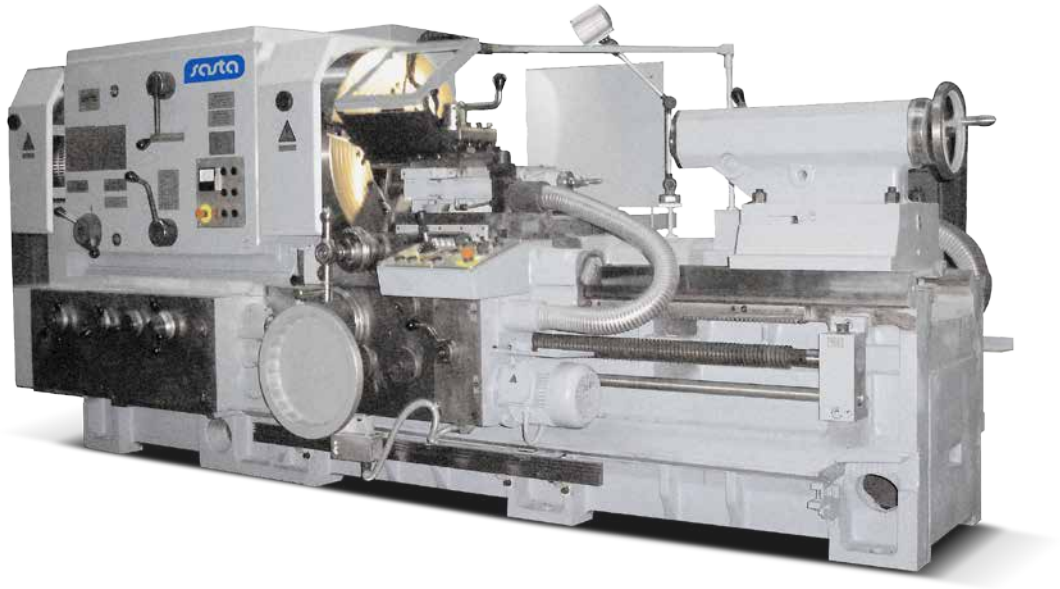

Main advantages

• Easy-to-use pipe-threading lathe designed for processing of long pipes and parts of pipe connections with a diameter of up to 340 mm, used for the production and transportation of oil and natural gas.

• It is also suitable for all types of turning works.

• Suitable for cutting metric and inch (including conical) threads.

• It is equipped with a hydraulic mechanism for automation of one thread-cutting passage (hydro-rebound) when threading in manual mode and in a cycle.

• The machine is assembled on a cast iron bed, with hardened sliding guideways.

• The machine is equipped with two mechanized 4- jaws chucks with a diameter of 720 mm.

Technical specification	CA983
WORKING AREA	
Spindle bore diameter, mm	Ø340
Max. diameter of the workpiece to be processed over bed/carriage, mm	830/450
Max. diameter of the workpiece to be processed over gap, mm	1000
Length of the workpiece processed in centers, mm	1000/2000/3000
Max. length of the workpiece to be processed with taper attachment , mm	500
Max. weight of the workpiece processed in chuck/centers, kg	2000/5000
SPINDLE	
Max. spindle speed, rpm	8-355
Speed adjustment	Step (12 steps)
Main motor power, kW	15
Max. torque, Nm	3000
Chuck diameter, mm	720
TRAVEL	
X axis travel, mm	500
Z axis travel, mm	1000/2000/3000
RAPID FEED	
X axis rapid feed, mm/min	2200
Z axis rapid feed, mm/min	5300
FEED	
Cutting feed range, mm/min	0.042-1.179
Cut thread range, mm/rev	0.09-2.67
CUT THREADS STROKE LIMITS	
Metric, mm	1-28
Inch, thread per inch	28-1
TURRET	
Number of tools	4
Tool section, mm	32x32
Rotary mechanizm	Manual
TAILSTOCK	
Quill travel, mm	240
Quill diameter, mm	120
Quill taper	MT6
DIMENSIONS AND WEIGHT	
Length, mm	3640/4640/5640
Width, mm	2050
Height, mm	1675
Weight, kg	10300/10900/11500

* option

Standard equipment

- 4-position tool holder with hydro-rebound
- Flap on the carriage with inspection glass
- Taper attachment
- Tailstock with dead and live centers MT6
- Self-centering 4-jaw chucks with independet movement of jaws and electromechanical clamping
- Chucks guard with locking
- Coolant tank
- Work light
- Leveling pads

Options

- Follow rest
- Steady rest
- Removable supporting rest

PIPE-THREADING (OIL COUNTRY) LATHES

Pipe-threading lathes with cycle CNC (F2) and CNC (F3)

CA700F2/F3, CA750F2/F3

Main advantages

• Cycle CNC or CNC version.

• Designed for processing in automatic and semi-automatic cycle of long pipes and parts of pipe connections with a diameter of up to 375 mm, used for the production and transportation of oil and natural gas.

• It is also suitable for all types of turning works.

• The machine is assembled on a cast iron bed with rolling guideways.

Technical specification	CA700F2	CA700F3	CA750F2	CA750F3
WORKING AREA				
Spindle bore diameter, mm	140 (145*)		166 (260, 375*)	
Max. diameter of the workpiece to be processed and to be installed, mm over bed over carriage	700 430		800 450	
Max. length of the workpiece to be installed in centers, mm	900/1900/2900		1000/2000/3000/4000/5000	
Max. length of the workpiece to be processed in centers, mm	850/1850/2850/3850		950/1950/2950/3950/4950	
Max. weight of the installed workpiece (in chuck/in centers), kg	400/3500		400/3000	
SPINDLE				
Spindle speed, rpm	4…1600		5…2200 – for Ø166 0…1200 – for Ø260 0…500 – for Ø375	
Speed adjustment	Stepless in 2 ranges			
Main motor power, kW	18.5/23	22/27.5	32.6/40,7 (39.3/49)*	30/37 (37/46)*
Max. torque, Nm	2250/2800	1750/2200	1500/1875 – for Ø166 2076/2595 – for Ø260 3000/3750 – for Ø375 (39.3 kW)	1810/2262 (1710/2137)* – for Ø166 2490/3112 – for Ø260 2820/3525 – for Ø375 (37 kW)
FEED				
X axis cutting feed range, mm/min	1-2000		1-4000	
Z axis cutting feed range, mm/min	1-4000			
Cut threads stroke limits, mm/rev	0.5-150			
X axis rapid feed, mm/min	4000		6000	
Z axis rapid feed, mm/min	6000			
Feed speed adjustment	Stepless			
TURRET				
Number of tools	4 (8*)	8 (4*)	4 (12)*	12
Tool section, mm	32x32 (25x25*)	25x25 (32x32*)	32x32 (40x32, 32x32, 32x25*)	32x25 (40x40*)
TAILSTOCK				
Quill travel, mm	240		240	
Quill diameter, mm	120		120	
DIMENSIONS AND WEIGHT				
Length, mm	3250/4250/5300/6250		4565/5565/6565/7565/8565	
Width, mm	2300		2075	
Height, mm	1960		2120	
Weight, kg	4500/5000/5700/6300		5670/6670/7670/ 8670/9670	5800/6800/7800/ 8800/9800

* option

Standard equipment

- Cycle CNC control system (for F2) or Fanuc (for F3) CNC system
- Control panel with touch screen
- MPG portable
- Self-centering 4-jaw chucks with independet movement of jaws and electromechanical clamping
- 4-position precise positioning cutter head (with Hirth coupling)
- Tailctock with dead and live centers MT6
- Self-centering 3-jaw pneumatic chucks
- Coolant system
- Chip tray
- Semi-cover protection for cutting area
- Work light
- Leveling pads

Options

- CNC Fanuc 0i-TF/Siemens 828D
- 4-position turret with vertical axis (40x40) (for CA750)
- 8-position turret VDI40 with horizontal axis
- 12-position turret VDI50 with horizontal axis (for CA750)
- Tailstock quill hydraulic driver
- Hydraulic station (for quill hydraulic driver, hydraulic chucks)
- Follow and steady rests
- 4-jaws pneumatic chucks
- Supporting rest (free standing)
- Chip conveyor with build-in tank and coolant pump (instead of coolant tank)
- Tipping chip tray
- Coolant gun (or pneumatic gun)
- Air conditioner

PIPE-THREADING (OIL COUNTRY) LATHES

Pipe-threading lathes with cycle CNC (F2) and CNC (F3)

CA983F2/F3

Main advantages

• Cycle CNC or CNC version.

• Designed for processing in automatic and semi-automatic cycle of long pipes and parts of pipe connections with a diameter of up to 340 mm, used for the production and transportation of oil and natural gas.

• The largest torque (up to 7625 Nm) on the spindle in its class.

• It is also suitable for all types of turning works.

• The machine is assembled on a cast iron bed, with hardened sliding guideways.

Technical specification	CA983F2	CA983F3
WORKING AREA		
Spindle bore diameter, mm	340	
Max. diameter of workpiece to be installed over bed, mm	830	
Max. diameter of workpiece to be processed over carriage, mm	410	
Lenght of the workpiece to be processed in centers, mm	1050/2050/3050	
Max. weight of the installed workpiece (in chucks/centers), kg	2000/5000	
SPINDLE		
Spindle speed limits, rpm	5-750	
Speed adjustment	Stepless in 2 ranges	
Main motor power, kW	31.94/39.27	22/27.5 (Siemens) 30/37.5 (Fanuc)
Max. torque, Nm	6100/7625	4200/5250 (Siemens) 4982/6228 (Fanuc)
FEED		
X/Z cutting feed range, mm/min	1-4000	
Cut threards range, mm/rev	0.5-150	
X/Z rapid feed, mm/min	6000	
TURRET		
Number of tools	4 (12*)	
Tool section, mm	40x32 (50x40; 40x40; 32x32; 32x25)*	32x32 (40x40)*
TAILSTOCK		
Quill travel, mm	240	
Quill diameter, mm	120	
Quill taper	MT6	
DIMENSIONS AND WEIGHT		
Length, mm	5175/6175/7175	
Width/with control panel swivel, mm	2650/3130	
Height, mm	2025	
Weight, kg	9850/10850/11850	10000/11000/12000

* option

Standard equipment

- Cycle CNC control system
- Control panel with touch screen
- MPG portable
- Self-centering 4-jaw chucks with independet movement of jaws and electromechanical clamping
- 4-position precise positioning cutter head (with Hirth coupling)
- Tailctock with dead and live centers MT6
- Coolant system
- Chip tray
- Semi-cover protection for cutting area
- Work light
- Leveling pads

Options

- CNC Fanuc 0i-TF/Siemens 828D
- 4-position turret with vertical axis (40x40)
- 12-position turret VDI50 with horizontal axis
- Tailstock quill hydraulic driver
- Hydraulic station (for quill hydraulic driver, hydraulic chucks)
- Follow and steady rests
- Chip conveyor with build-in tank and coolant pump (instead of coolant tank)
- Supporting rest (free standing)
- Tipping chip tray (600 l)
- Coolant gun (or pneumatic gun)
- Air conditioner

HEAVY DUTY LATHES WITH STRAIGHT-THROUGH GARRIAGES

CA1120F3/F4, CA1270F3/F4, CA1350F3/F4

Main advantages

• Provide optimal processing technology for long parts.

• Part processing is carried out along the entire length without reinstalling due to the fact that the carriages have the ability to bypass the rests, go for the headstock and tailstock.

• The length of the workpiece up to 20 meters, weight up to 12 tons.

• It is possible to equip with two carriages and grinding head.

• The positioning accuracy of the axes 20 μm (12 μm optional).

• The carriage moves along the rolling guides, the tailstock is mounted on the sliding guides.

Technical specification	CA1120F3/F4	CA1270F3/F4	CA1350F3/F4
WORKING AREA			
Max. diameter of workpiece to be processed, mm over bed over carriage	 1100 950	 1285 1120	 1350 1200
Max. weight of the installed workpiece (in chuck/centers), kg	1000/12000		
SPINDLE			
Spindle speed limits, rpm	5-750		5-120
Speed adjustment	Stepless		
Number of spindle speed ranges	2		4
Main motor power, kW	60/75		30/37
Max. torque, Nm	9160/11450		9160/11450
Spindle nose according to DIN55026	A15		
Spindle bore diameter, mm	180		
RAPID FEED			
X axis, mm/min	4000		5000
Z axis, mm/min	6000		5000
FEED			
X and Z axes cutting feed range, mm/min	1-4000		0.5-5000
Cut threads stroke limits, mm/rev	0.1-320		
TURRET			
Number of tools	4 (12)*		
Tool section	40x40 (32x32; VDI50*)		
TURRET WITH DRIVEN TOOL*			
Number of driven tools	12		
Driven tool power, kW	7.5*		
Driven tool speed, rpm	4000		2000 (4000)*
TAILSTOCK			
Tailstock quill travel, mm	320		
Tailstock quill diameter, mm	280		
Tailstock quill taper	M90		
DIMENSIONS AND WEIGHT			
Length, mm	7000/9000/10700/11700/13700/15700/17700/19700/21700/23700		
Width, mm	3300		
Height, mm	2400		
Weight, kg	13000/15000/17000/18000/20000/22000/24000/26000/28000/30000		

* option

Standard equipment

- Fanuc 0i-TF CNC system including all drivers
- MPG portable
- 4-jaw chuck with independent movement of jaws Ø1000 mm
- One carriage
- 4-position turret with vertical axis
- Tailstock with a rotating spindle build into the quill complete with center, quill hydraulic driver and moving electric driver
- Hydraulic station
- Coolant system
- Chip tray
- The protection guarding of the cutting area with one movable gate
- Work light
- Leveling pads

Options

- Siemens 828D CNC system
- 4-position turret with vertical axis (40x40)
- 12-position turret VDI50 with horizontal axis
- 12-position turret VDI50 with horizontal axis and driven tool
- Second carriage with turret
- Self-centering 3-jaw manual chucks
- 4-jaw manual chucks with independet movement of jaws
- Mechanized chucks (with hydraulic or pneumatic driver)
- Follow and steady rests
- Self-centering rests with hydraulic driver
- Chip conveyor with build-in tank and coolant pump (instead of coolant tank)
- Tipping chip tray
- Coolant gun (or pneumatic gun)
- Air conditioner

HEAVY DUTY LATHES WITH STRAIGHT-THROUGH GARRIAGES

CA1600F3/F4P, CA2000F3/F4P

Main advantages

• Provide optimal processing technology for long parts.

• Part processing is carried out along the entire length without reinstalling due to the fact that the carriages have the ability to bypass the rests, go for the headstock and tailstock.

• The length of the workpiece up to 25 meters, weight up to 35 tons.

• It is possible to equip with two carriages and grinding head.

• The positioning accuracy of the axes 20 μm (12 μm optional).

• The carriage moves along the rolling guides, the tailstock is mounted on the sliding guides.

Technical specification	CA1600F3/F4P	CA2000F3/F4P
WORKING AREA		
Max. diameter of workpiece to be processed, mm over bed over carriage	 1600 1350	 2000 1600
Max. weight of workpiece installed (in chuck/centers), kg	1000/35000	
SPINDLE		
Spindle speed limits, rpm	5-550	
Speed adjustment	Stepless	
Number of spindle speed ranges	4	
Main motor power, kW	84/105	
Max. torque, Nm	45000/56250	
Spindle nose according to DIN55026	A15	
Spindle bore diameter, mm	150	
RAPID FEED		
X axis, mm/min	10000	
Z axis, mm/min	10000	
FEED		
X and Z axes cutting feed range, mm/min	1-4000	
Cut threads stroke limits, mm/rev	0.5-250	
TURRET		
Number of tools	4 (12)*	
Max. height of the cutters, mm	50	
TURRET WITH DRIVEN TOOL*		
Number of driven tools	12	
Driven tool power, kW	7.5*	
Driven tool speed, rpm	4000	
TAILSTOCK		
Tailstock quill travel, mm	320	
Tailstock quill diameter, mm	280	
Tailstock quill taper	M90	
DIMENSIONS AND WEIGHT		
Length mm	11500/13500/15500	
Width, mm	3500	
Height, mm	3100	3500
Weight, kg	40000/46000/52000	42000/48000/54000

* option

Standard equipment

- Fanuc 0i-TF CNC system including all drivers
- MPG portable
- One carriage
- 4-position turret with vertical axis
- Tailstock with a rotating spindle build into the quill complete with center, quill hydraulic driver and moving electric driver
- Hydraulic station
- Coolant system
- Chip tray
- The protection guarding of the cutting area with one movable gate
- Work light
- Leveling pads

Options

- Siemens 828D CNC system
- 4-position turret with vertical axis (40x40)
- 12-position turret VDI50 with horizontal axis
- 12-position turret VDI50 with horizontal axis and driven tool
- Second carriage with turret
- Self-centering 3-jaw manual chucks
- 4-jaw manual chucks with independet movement of jaws
- Mechanized chucks (with hydraulic or pneumatic driver)
- Follow and steady rests
- Self-centering rests with hydraulic driver
- Chip conveyor with build-in tank and coolant pump (instead of coolant tank)
- Tipping chip tray (600 l)
- Coolant gun (or pneumatic gun)
- Air conditioner

Modernization and repair of lathes and pipe-threading machines

The high quality of modernization and repair of metal-cutting machines is ensured by the fact that all work is carried out at the same facilities at which the new machines are produced, and their specialists with extensive experience in the design and manufacture of machines. According to the accuracy characteristics of the machines, modernized and repaired by Sasta, they meet the requirements for new machines.

Modernization of CNC lathes

Modernization of lathes of own production has been taken to the assembly line. This does the following:

• Overhaul of the mechanical part of the machine, including:

– grinding and scraping of the guide surfaces;
– repair of gearbox;
– repair of tailstock;
– adjustment of gaps and blacklashes;
– ballscrews replacement (X and Z axes), bearings, including spindle bearings;
– turret replacement;
– replacement (if necessary) of other parts and units.

• Repair of cooling and lubrication systems with complete replacement of high-pressure hoses, rubber products and seals (replacement of pipelines – if necessary).

• Complete replacement of electrical cables, sensors, metal hoses, cable trunkings.

• Replacement of the CNC device (at the customer's choice) by: Fanuc Oi-TF (Japan); NC-200 (Russia, Saint-Petersburg); Sinumerik 808D (Germany, Siemens) and other.

• Rebuilding of the geometric accuracy of the machine.

• Testing of the machine at idle and the test program.

Modernization of universal lathes

Modernization universal lathes of own production includes:

– complete overhaul of the mechanical part and electrical equipment of the machine.
– installation of digital read out (DRO), at the customer's choice: "NEWELL" (England), LIR500 (Russia, Saint-Petersburg).

Modernization of pipe-threading machines type 1M983

Modernization of pipe-threading machines mod. 1M983, 1H983, 1A983 including:

– complete overhaul of the mechanical part and electrical equipment of the machine;
– increasing the bore diameter of the spindle from 320 mm to 340 mm (by installing a new spindle head on the headstock);
– overhaul of chucks with replacement of base jaw, spiral rings and jaws.

Term of the order execution – 2.5-3 months from the date of transfer of the machine for repair.

Sasta makes major repairs of:

– universal lathes of own production;
– pipe-threading machines mod. 1M983, 1H983, 1A983, CA983, CA984 and their modifications.

Term of major repairs – up to 3 months.

Sasts specialists execute MEDIUM and ROUTINE repair of equipment at the customer's facilities.
Repair period – up to 1 month. **The warranty period for modernized and overhauled equipment is 12 months.**

Machine service maintenance and the customer's personnel training

Sasta pays attention to the issues of service support of the supplied equipment. The company has established a Service Center.

Service center's tasks:

• start-up and adjustment works;

• maintenance service of equipment (medium or small repairs, technical inspection) during the warranty and post-warranty period of the machines;

• training of customer's specialists in operation and maintenance of the machines;

• overhaul and modernization of universal equipment and CNC machines.

Start-up work and adjustment works

Start-up and adjustment works on the delivered equipment are performed by the specialists of Sasta according to the signed contract provisions.

List of works during commissioning:

• inspection of machine installation and leveling;

• commissioning works in accordance with the standard program and test procedure of the machine or in accordance with the agreed technological process for the customer's parts machining;

• commissioning of the machine.

Service

Engineers of Sasta go to the place of the equipment operation, diagnose problems, make a defective sheet and a list of necessary spare parts. After delivery of all components we carry out repair of the equipment and we provide a warranty for the performed works.

Repair cost and terms are established after drawing up of the defects sheet and the specifi cation statement for average repair by the customer.

Warranty service

Warranty service of the machines manufactured by Sasta is carried out within 12 months, in accordance with the supply contract terms.

After-sales support

Sasta recommends to make an agreement on the after-sales maintenance of metal-working equipment, which can be concluded for a period of 1 to 3 years or more.

Training

The specialists of Sasta are ready to train the technical personnel of the customer within the frames of the mutually agreed program at Sasta factory or upon the reduced program at the customer's site.

"Hot line" on the issues of machine operation
+7 (49133) 9-39-64

Renishaw measuring systems

for tool setting at CNC lathe machines

Renishaw produces a manual and fully automatic systems for tool set-up.

Non-automatic systems are suitable for those cases when tool adjustment is relatively rare. Fully automatic systems are ideal for frequent re-adjustment of the machine to a new batch of products or the organization of the process, excluding the participation of the operator.

HPRA precision removable arm

HPPA high precision back out arm

HPMA precision motorized arm

HPRA is an insert-type bracket manually installed on the machine for tool setting and which is to be taken off upon the adjustment fi nish. During measurement performance the arm is fi xed at the butt joint providing high repeatable accuracy of the installation. Herewith repeatable positioning accuracy of the sensor probe is within 5 micron (2 σ). When HPRA is not used, it is stored on the stand located on the machine or next to the machine.

HPPA is a measuring system with a non-automatic swinging lever on which the contact measuring sensor is installed. This system is permanently fi xed to the lathe and can be used at any time for tool setting. The rotating device automatically locks the arm into the socket, ensuring high repeatable accuracy of the sensor location. No adjustment or additional locking device is required. This ensures high repeatable accuracy of the contact probe of the measuring sensor at a given point (2σ not more than 5 μm).

HPMA arm-bracket with electric drive for high-precision automatic tool adjustment. The short delay time when the hand drive is turned on allows you to adjust the tool and determine its failure directly during processing and without operator intervention. The rotation of the arm in its working position and its fi xation herewith takes 2 seconds. After setting up the tool, the control program gives the command to return the arm with the sensor to a safe position outside the working area of the machine. The rotating device automatically locks the hand precisely into the socket, ensuring high repeatable accuracy of the sensor location. No adjustment or additional locking device is required. HPMA systems of various standard sizes are available.

Workpieces measuring systems for CNC lathe machines

Measuring probe RLP40

Renishaw measuring probes can be used to bind the workpiece to the machine coordinate system and control the workpiece during its manufacture on lathe machine. The probe allows you to determine the location of the workpiece relative to the coordinate system of the machine, automatically switch to the coordinate system of the workpiece and, thus, to produce products in accordance with technical requirements from the first attempt.

The probe can also be used to identify work pieces using flexible production systems; to determine the position of the workpiece, as well as to detect its incorrect loading in order to avoid defect; to determine the distribution of machining allowances in order to quickly and safely bring the cutting tool to the workpiece.

In the manufacture of a batch of identical products, the control of the fi rst part directly on the machine allows you to reduce the downtime of the machine, associated with the expectation of the results of the test on the device outside the machine, to automatically correct any errors.

Control within the technological process: measurement of workpiece parameters after pre-treatment to ensure the necessary accuracy of fi nishing; to identify the errors before they result in the defective products.

Control of the fi nished part. The probe allows: to make sure that the product meets the specifi ed technical requirements; to obtain the dimensions of the processed products for statistical monitoring of the machining process.

Probes usage on lathes requires the remote transmission of probe signal to the CNC. There are two ways: optical signal transmission (requires direct visibility between the probe and receiver); radio signal transmission (operates at a distance of up to 5 meters from the receiver).

391430, Pushkin street, 21
Sasovo city, Ryazan region,
Russia
Purchase department:
+7 (49133) 9-33-75
info@sasta.ru

WWW.SASTA.RU

For order of equipment:
+7 (49133) 9-33-38
+7 (49133) 9-39-59

Baltiyskaya Promishlennaya Kompaniya, AO
+7 (812) 605-00-33
info@bpk-spb.ru

MACHINE-TOOL PLANT **SASTA**